blendmount.com
1-888-497-8388
help@blendmount.com

BV1-2034

INSTALLATION INSTRUCTIONS FOR VALENTINE ONE MOUNT RADAR DETECTORS

LEFT HAND DRIVE VEHICLE

THIS MOUNT MUST BE INSTALLED FROM THE PASSENGER SIDE

Your rear view mirror has minimal clearance between the back side of the mirror and the mirror stem. It is very important that this mount is installed correctly to ensure mirror adjustability is retained.
PLEASE READ THESE INSTRUCTIONS THOROUGHLY BEFORE INSTALLING THIS MOUNT

NOTE: For illustration purposes, the mount and rear view mirror shown in these instructions may look slightly different then YOUR mount and rear view mirror.

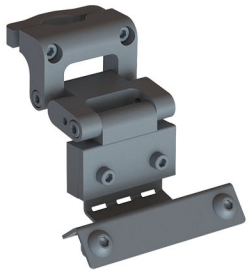

7 28028 46501 3

1 Remove the two suction cups that are on your existing V1 Gen1 or Gen 2 windshield mount. The two holes that were used to secure the suction cups are now used to attach the BlendMount.

2 Remove the lock washer and nut from the button head screws and place the BlendMount assembly onto the V1 windshield mount. Re-attach the lock washer and nut and tighten with the supplied allen wrench.

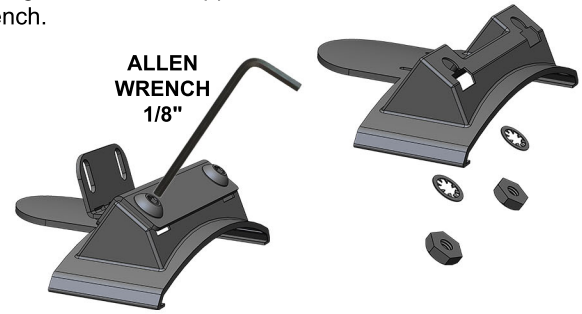

3 **Install the mount while sitting in the passenger side of your vehicle**. Remove the two socket head screws so the top portion of the mount may be removed. Position the mount on the bottom of the stem as shown above. Reattach the top portion of the mount. Tighten both screws evenly making sure it is in the correct position as shown above. Tighten both screws until mount is securely attached to the mirror stem.

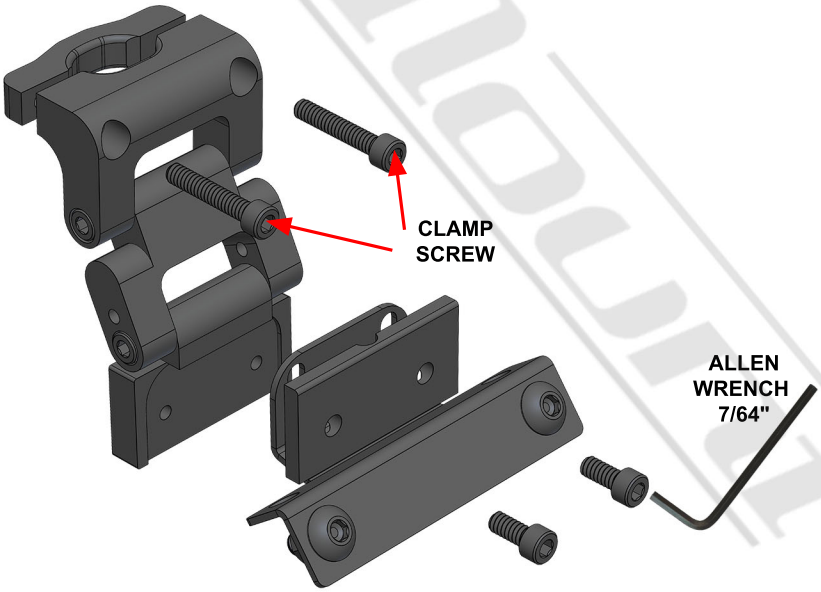

BlendMount®
Innovative Mounting Solutions

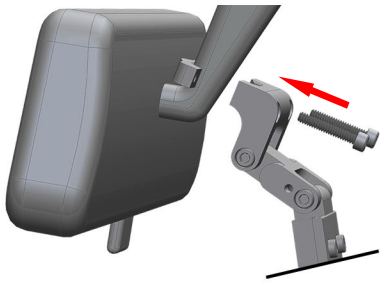

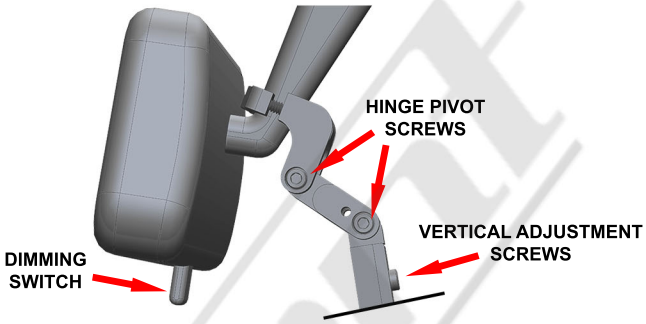

5 Install the mount while sitting in the passenger side of your vehicle. Remove the two socket head screws so the top portion of the mount may be removed. Position the mount on the bottom of the stem as shown above. Reattach the top portion of the mount. Tighten both screws evenly making sure it is in the correct position as shown above. Tighten both screws until mount is securely attached to the mirror stem.

6 Install the RD onto the mount. We recommend you adjust the RD so it is as close to the bottom of the mirror as possible. Using the vertical adjustment and orienting the double pivot center link, adjust RD upward as far as possible while making sure the mirror dimming switch is still accessible. After all adjustments are made, be sure to check that the pivot and vertical adjustment screws are tight. Grab the long arm of the allen wrench to assure that these screws are securely tightened.

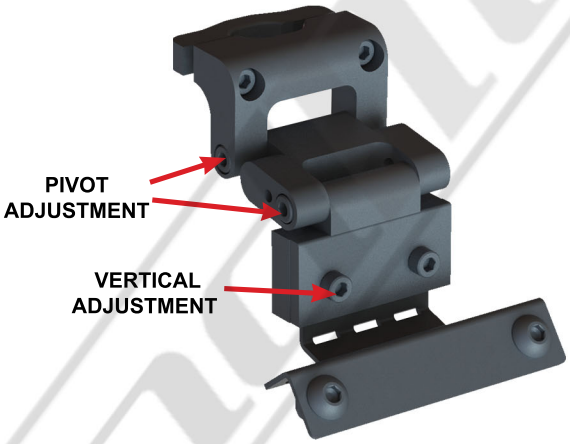

7 Reinstall the body assembly. Be sure to include all lock washers with screws, and the lock and flat washer with the bottom socket head screw as shown above. Use the adjustments shown above to adjust the RD to your desired position. We recommend adjusting the RD as close to the bottom of mirror as possible. Be sure to tighten all screws after adjustments are made.

CAUTION

DO NOT use this mount if it interferes with the adjustability or the operation of your rear view mirror in any way.
DO NOT use this mount if the radar detector creates an unsafe viewing obstruction.
DO NOT ATTEMPT TO MODIFY THIS PRODUCT. Consult the manufacturer for assistance.
All BlendMount products are accompanied with detailed installation instructions and adjustment tips. You are encouraged to contact customerservice@blendmount.com or call J28 Design at 1-888-497-8388 for further assistance.

Check the BlendMount Forum for installation tips and some vehicle specific installs.
www.blendmount.com

Your feedback is very important to us. Please email any questions or comments you have to **customerservice@blendmount.com**

J28 DESIGN
Innovative Design And Precision Manufacturing

BlendMount - US PATENT # D625,580 S, D656,811 S, D653,980 S and other patents pending